EAUP-16RJ UTP Transceiver Wire Configuration For Veo 12016N

www.i3international.com
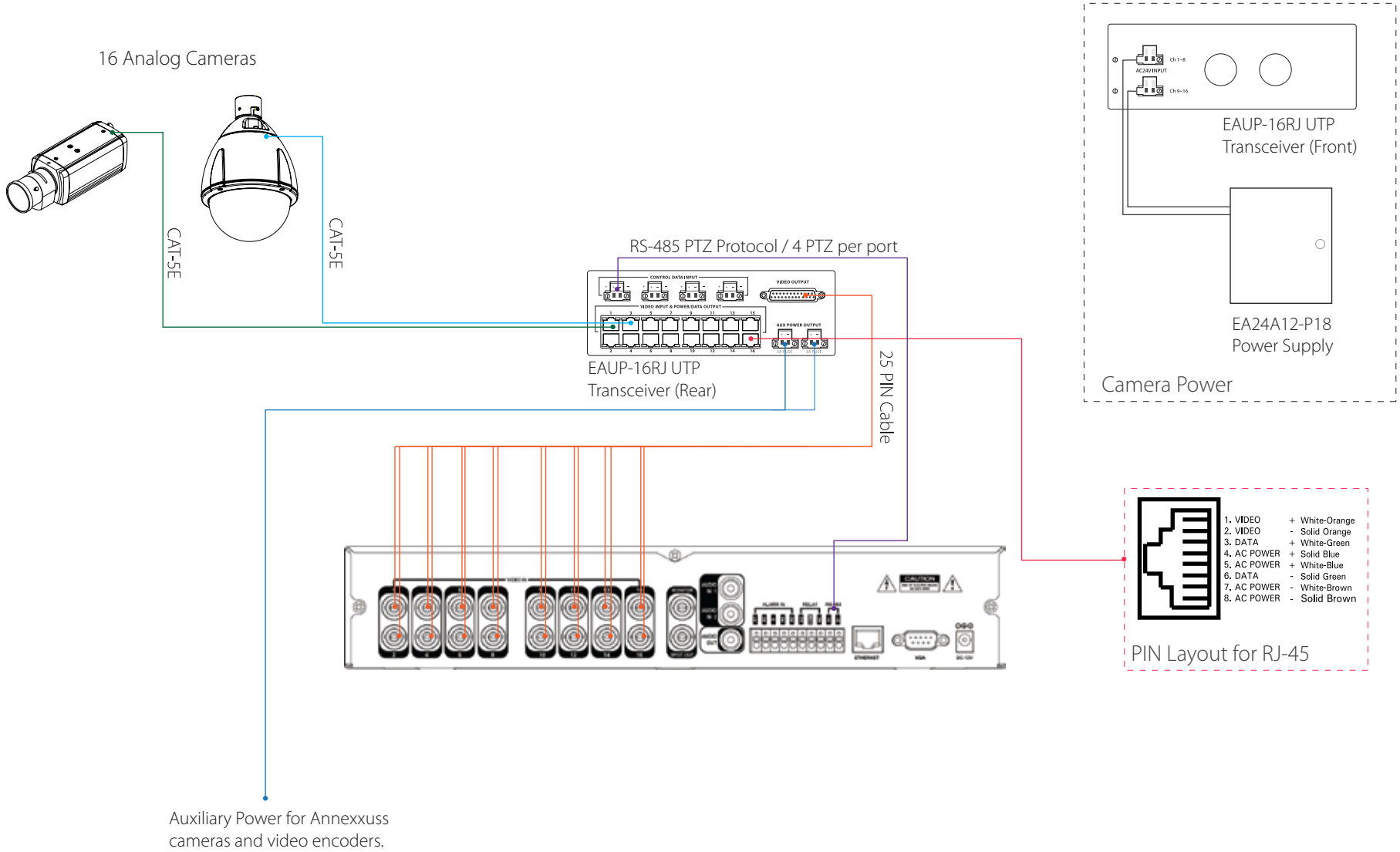
SYSTEM DRAWING